ASSEMBLY INSTRUCTION

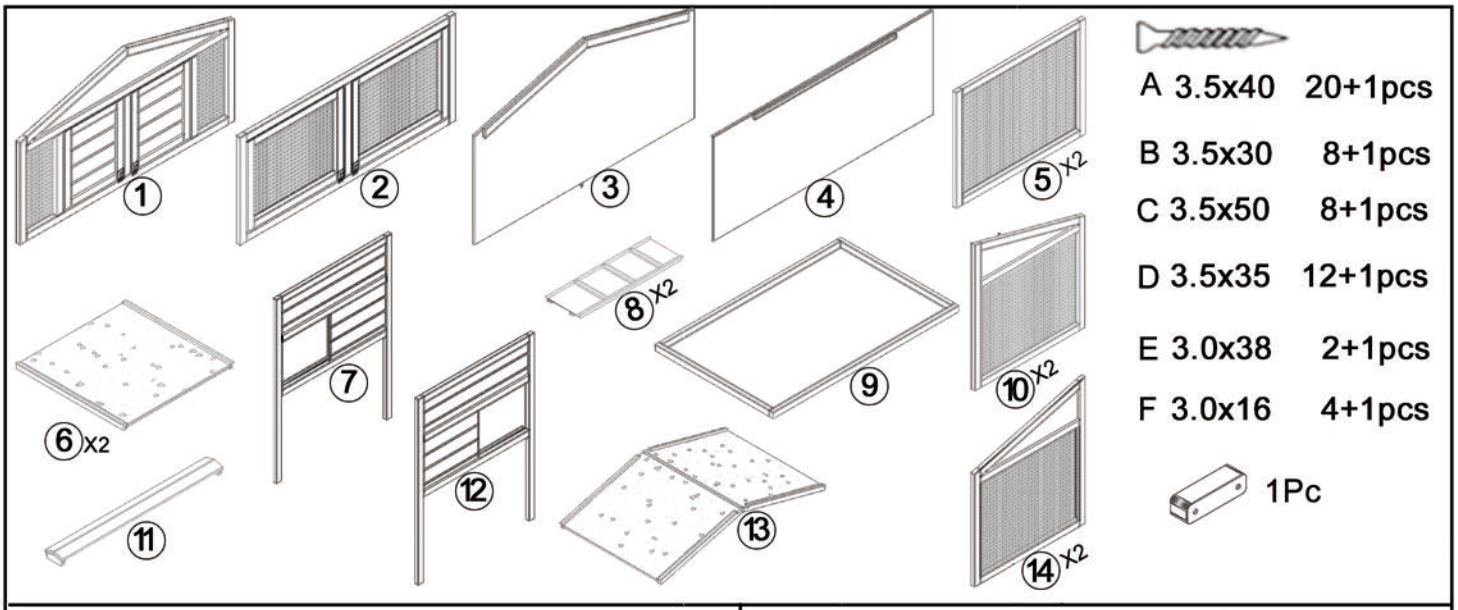

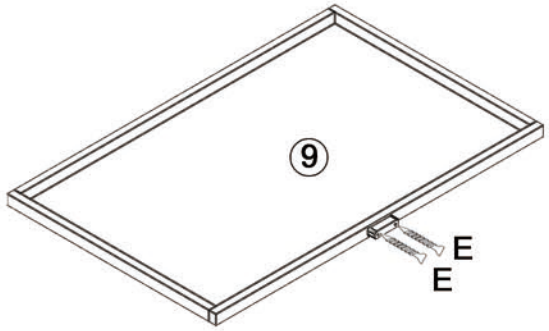

Step1

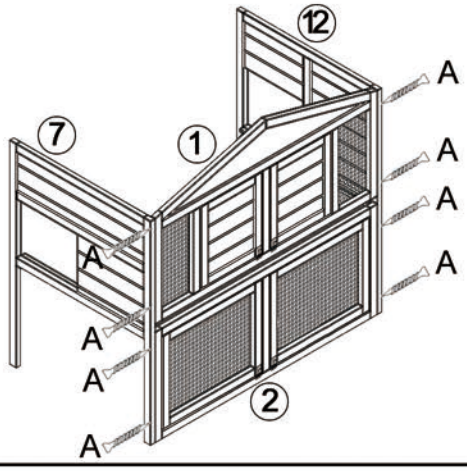

Step2

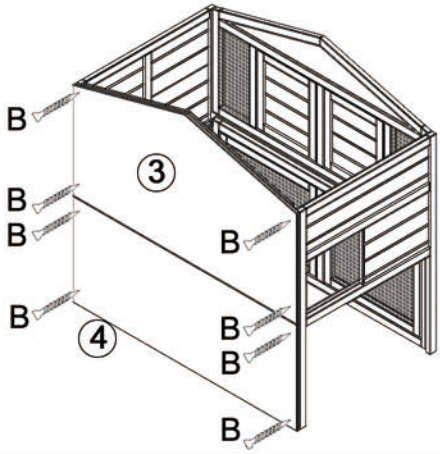

Step3

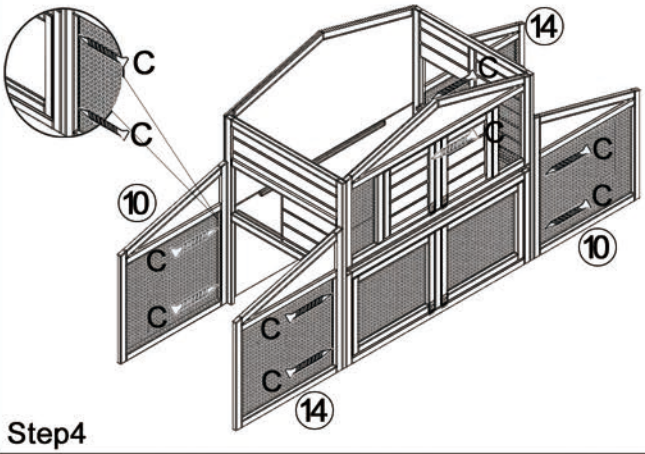

Step4

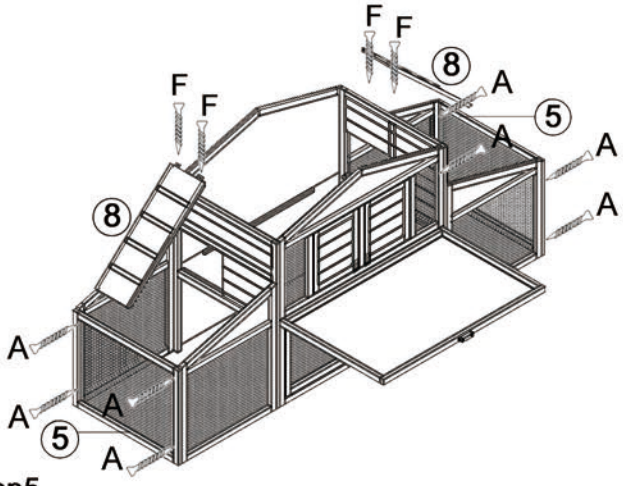

Step5

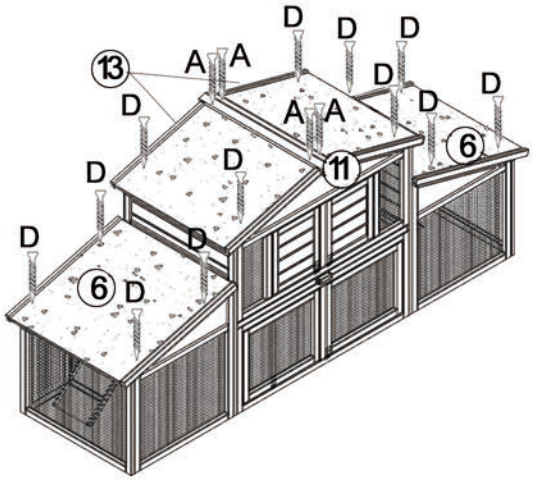

Step6